MERCRUISER (5.7LX BRAVO EFI (GEN+) GM 350 V-8 1997)
Serial Nbr Range: 0K001509 AND UP ()

WIRING HARNESS (EFI)

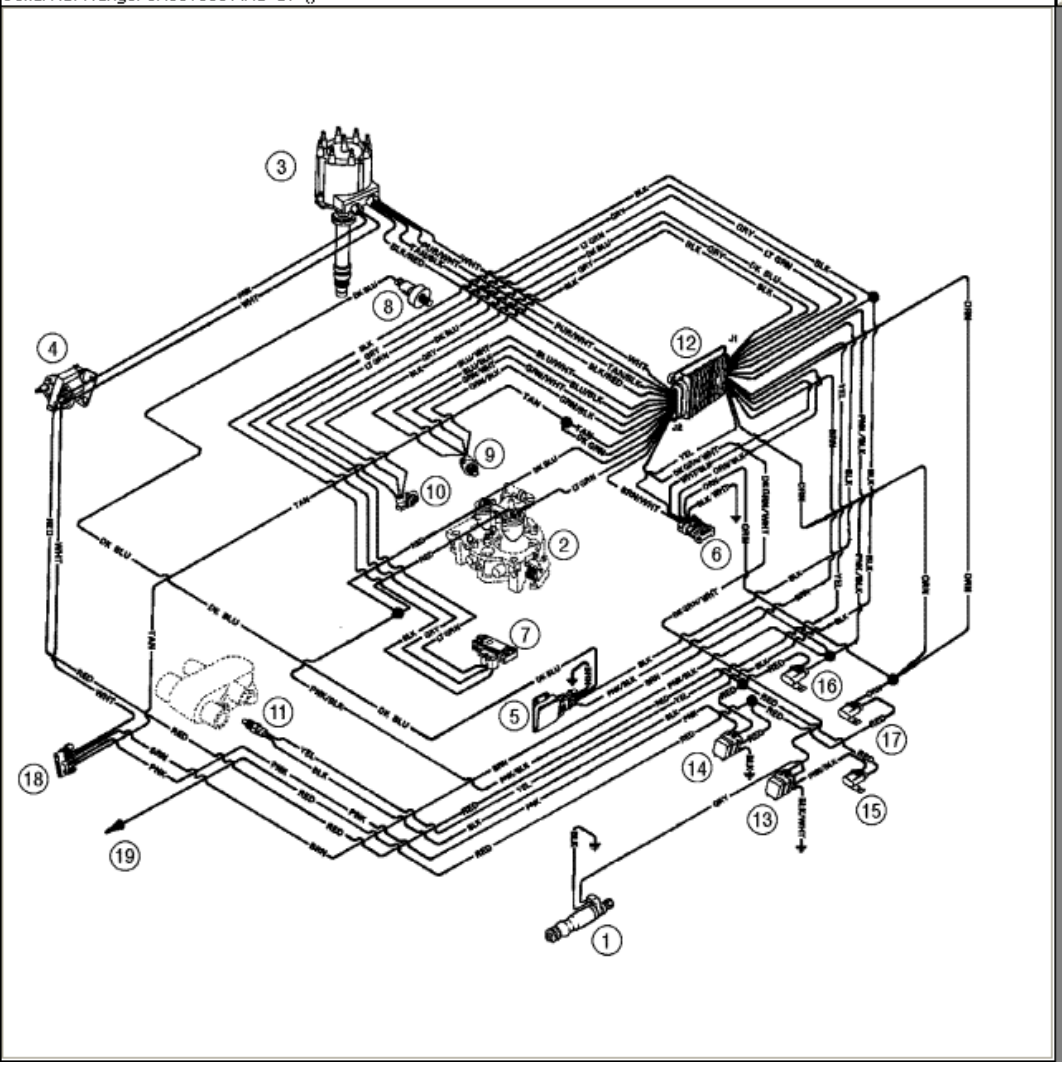

Parts List

Ref	Class	Part	Description	Qty	Comment	Footnote
-	84	807699A 2	WIRING HARNESS-ENGINE	1		